14 SERIES MOULDED CASE CURRENT TRANSFORMERS

HOBUT

DESCRIPTION

A range of compact moulded case current transformers suitable for primary currents from 25A to 500A with built in sealable terminal covers.

APPLICATION

For transforming various primary currents into 5A or 1A standard secondary using 30x10mm or 20x20mm busbars or cables up to 24mm diameter.

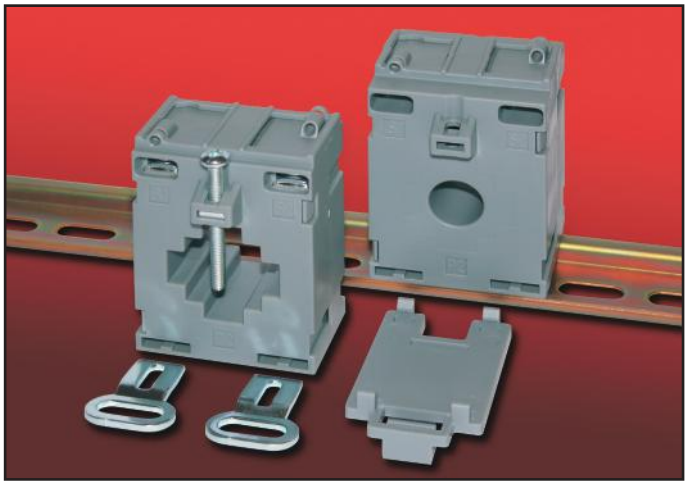

FEATURES

- DIN rail mounting clip supplied.
- Built in sealable terminal covers.
- Mounting feet and busbar screws supplied.
- Narrow width - 50mm.

TECHNICAL SPECIFICATION

- Conforms to IEC185, BS 7626, BSEN 60044-1, IEC 60044-1 and IEC 61869-2.
- Rated system voltage 0.72/3kV.
- Ambient temperature range -5°C to +50°C.
- Continuous current 1.2 x rated current.

RANGE (Type 141) 5A Secondry

	Class 3				Class 1				Class 0.5		
VA	1.5	2.5	5	10	1.5	2.5	5	10	1.5	2.5	5
25A	A1	A2	–	–	–	–	–	–	–	–	–
30A	B1	B2	–	–	–	–	–	–	–	–	–
40A	C1	C2	–	–	C5	–	–	–	–	–	–
50A	D1	D2	–	–	D5	D6	–	–	–	–	–
60A	E1	E2	E3	–	E5	E6	–	–	–	–	–
80A	F1	F2	F3	–	F5	F6	F7	–	F9	F10	–
100A	G1	G2	G3	–	G5	G6	G7	–	G9	G10	–
120A	H1	H2	H3	H4	H5	H6	H7	H8	H9	H10	–

Order Example: A moulded case current transformer type 141, with 5A secondary and 100A primary 2.5VA class 3 is part number 141-5-G2

DIMENSIONS (mm)

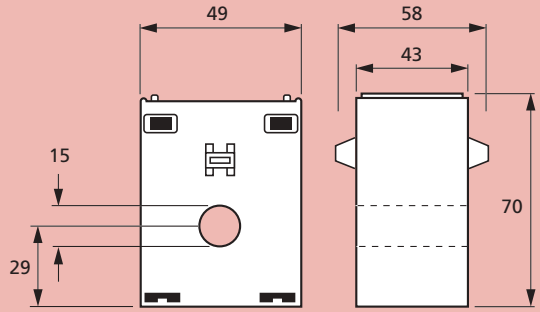

Ø Internal Diameter 15mm

RANGE (Type 143) 5A Secondry

	Class 3				Class 1				Class 0.5		
VA	1.5	2.5	5	10	1.5	2.5	5	10	1.5	2.5	5
60A	A1	A2	–	–	A5	–	–	–	–	–	–
75A	B1	B2	–	–	B5	–	–	–	–	–	–
80A	C1	C2	–	–	C5	–	–	–	–	–	–
100A	D1	D2	–	–	D5	D6	–	–	D9	–	–
125A	E1	E2	–	–	E5	E6	–	–	E9	–	–
150A	F1	F2	–	–	F5	F6	–	–	F9	–	–
200A	G1	G2	G3	–	G5	G6	G7	–	G9	G10	–
250A	H1	H2	H3	–	H5	H6	H7	–	H9	H10	–
300A	J1	J2	J3	J4	J5	J6	J7	J8	J9	J10	J11
400A	K1	K2	K3	K4	K5	K6	K7	K8	K9	K10	K11
500A	L1	L2	L3	L4	L5	L6	L7	L8	L9	L10	L11

1A secondary available by request.

Order Example: A moulded case current transformer type 143, with 5A secondary and 400A primary 5VA class 1 is part number 143-5-K7

DIMENSIONS (mm)

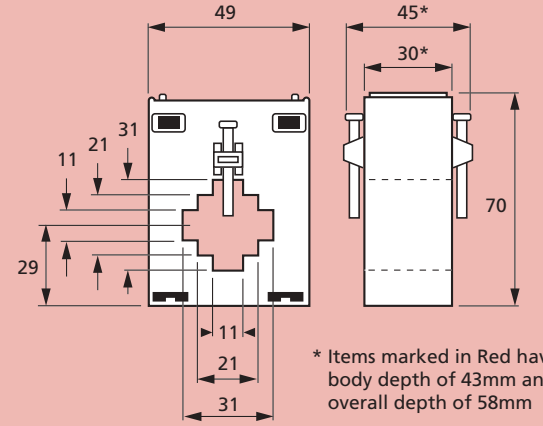

* Items marked in Red have body depth of 43mm and overall depth of 58mm

Ø Internal Diameter 24mm
Busbar 30x10mm, 20x20mm

Our policy is one of continuous development and therefore specifications may change without notice.

HOWARD BUTLER LTD

CROWN WORKS, LINCOLN ROAD
WALSALL WS1 2EB ENGLAND

Tel: 01922 640003 Fax: 01922 723626
International Tel: +44 1922 640003 E-mail: sales@hobut.co.uk
http://www.hobut.co.uk

September 2017